THE LONDON SCHOOL OF ECONOMICS AND POLITICAL SCIENCE

Grantham Research Institute on Climate Change and the Environment

Knowledge spillovers from clean and dirty technologies

Antoine Dechezleprêtre
London School of Economics

Joint work with Ralf Martin & Myra Mohnen

Motivation 1: Optimal climate policy design

- To address climate change we need innovation
- Investments in clean R&D hampered by two market failures (Jaffe, Newell & Stavins 2005)
  - Pollution externality
  - Knowledge externality
- 2 policy instruments needed to address this:
  - Carbon tax / ETS
  - Public R&D support / R&D subsidies

Knowledge externalities

- A general problem of all technologies
  - Some policies exist: IP, R&D tax credits

- Do we need *specific* policies for clean?
  - Ex: in 2011 OECD countries spent over 3 bn euros on R&D support to renewable energy technologies

- Necessary condition:

  Knowledge spillovers larger for clean

  [Goulder and Schneider (1999)]

Motivation 2: Directed Tech Change & Growth

- **Climate policy as growth and employment policy?**

Climate change policies are not an "unbearable burden" on the economy but unashamedly **good for growth**
Ed Davey, UK Energy Secretary

"The Administration is developing a comprehensive energy and climate change plan to (...) address the global climate crisis, and create new American jobs that cannot be outsourced. (...) This program will be implemented through a cap-and-trade system (...)."

Executive Budget Office of the President, 2009.

Double dividend?

If Clean > Dirty Spillovers

- A policy-induced redirection of innovation from dirty to clean technologies will reduce the net cost of environmental policies...
- ... and can even lead to higher economic growth
  - One of the theoretical motivations for the Porter hypothesis [Mohr 2002; Hart 2004 and 2007; Ricci 2007]

Research program

- Compare relative degree of spillovers between clean and dirty technologies in transportation and electricity production
- Measure knowledge spillovers using patent citations
  - Rely on extensive literature on spillovers
  - Improve methods

Related literature

1. Measurement and drivers of knowledge spillovers using patent citations [Griliches (1992); Trajtenberg (1990); Jaffe et al (1993); Henderson, Jaffe and Trajtenberg (1996); Hall et al. (1991); Thompson and Fox-Kean, (2005)]
2. A few papers on energy technologies [Popp and Newell (2012); Nemet (2012); Bjorner and Mackenhauser (2013); Verdolini and Galeotti (2011)]
   - No paper on clean vs dirty technologies
3. Impact of knowledge spillovers on firms' productivity and long run growth [Romer (1990); Aghion and Howitt (1996)]
   - Endogenous growth models with clean technologies and environmental policies [Smulders & de Nooij (2003); Hart (2004, 2007), Ricci (2007)]

Patent data

- World Patent Statistical Database (PATSTAT) @ EU Patent Office

- 1.2 million inventions filed in 107 patent offices from 1950 to 2005, 3 million citations made to these inventions

Technology groups

Dirty	Group	Clean
Fossil fuel based (coal & gas)	***Electricity generation***	Renewables
Internal combustion vehicles	***Automotive***	Electric, Hybrid, Hydrogen

Maybe things aren't so binary?

Grey (less dirty) innovations: Making fossil fuels more efficient

→ Cars: fuel injection technologies

→ Energy generation: "cleaner" coal (CHP, IGCC…)

Measuring knowledge spillovers

- Use citations made to previous patents
  - Trajtenberg (1990), Cabellero and Jaffe (1993), Jaffe and Trajtenberg (1996, 1998), Jaffe et al. (1998), Jaffe et al. (2000)

- Advantages
  - Patents leave a "trail": mandatory for inventors to cite "prior art"
  - Data availability
  - Technological disaggregation

- Disadvantages
  - Patent citations do not capture all knowledge spillovers
  - Not all patent citations represent knowledge spillovers
    - Exclude self-citations and citations added by examiners

Patent example

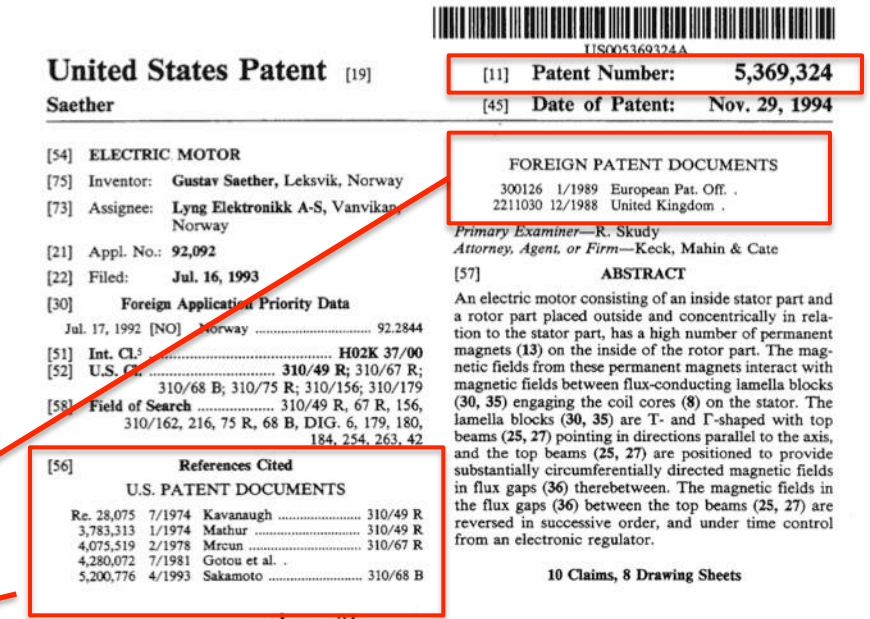

US005369324A

United States Patent [19]

Saether

[11] **Patent Number: 5,369,324**

[45] **Date of Patent: Nov. 29, 1994**

[54] **ELECTRIC MOTOR**

[75] Inventor: **Gustav Saether**, Leksvik, Norway

[73] Assignee: **Lyng Elektronikk A-S**, Vanvikan, Norway

[21] Appl. No.: **92,092**

[22] Filed: **Jul. 16, 1993**

[30] **Foreign Application Priority Data**

Jul. 17, 1992 [NO] Norway 92.2844

[51] **Int. Cl.**[5] **H02K 37/00**

[52] **U.S. Cl.** ..... **310/49 R**; 310/67 R; 310/68 B; 310/75 R; 310/156; 310/179

[58] **Field of Search** ..... 310/49 R, 67 R, 156, 310/162, 216, 75 R, 68 B, DIG. 6, 179, 180, 184, 254, 263, 42

[56] **References Cited**

U.S. PATENT DOCUMENTS

Re. 28,075	7/1974	Kavanaugh	310/49 R
3,783,313	1/1974	Mathur	310/49 R
4,075,519	2/1978	Mrcun	310/67 R
4,280,072	7/1981	Gotou et al.	
5,200,776	4/1993	Sakamoto	310/68 B

FOREIGN PATENT DOCUMENTS

300126	1/1989	European Pat. Off. .
2211030	12/1988	United Kingdom .

Primary Examiner—R. Skudy
Attorney, Agent, or Firm—Keck, Mahin & Cate

[57] **ABSTRACT**

An electric motor consisting of an inside stator part and a rotor part placed outside and concentrically in relation to the stator part, has a high number of permanent magnets (**13**) on the inside of the rotor part. The magnetic fields from these permanent magnets interact with magnetic fields between flux-conducting lamella blocks (**30, 35**) engaging the coil cores (**8**) on the stator. The lamella blocks (**30, 35**) are T- and Γ-shaped with top beams (**25, 27**) pointing in directions parallel to the axis, and the top beams (**25, 27**) are positioned to provide substantially circumferentially directed magnetic fields in flux gaps (**36**) therebetween. The magnetic fields in the flux gaps (**36**) between the top beams (**25, 27**) are reversed in successive order, and under time control from an electronic regulator.

10 Claims, 8 Drawing Sheets

[56] **References Cited**

U.S. PATENT DOCUMENTS

Re. 28,075	7/1974	Kavanaugh	310/49 R
3,783,313	1/1974	Mathur	310/49 R
4,075,519	2/1978	Mrcun	310/67 R
4,280,072	7/1981	Gotou et al.	
5,200,776	4/1993	Sakamoto	310/68 B

FOREIGN PATENT DOCUMENTS

300126	1/1989	European Pat. Off. .
2211030	12/1988	United Kingdom .

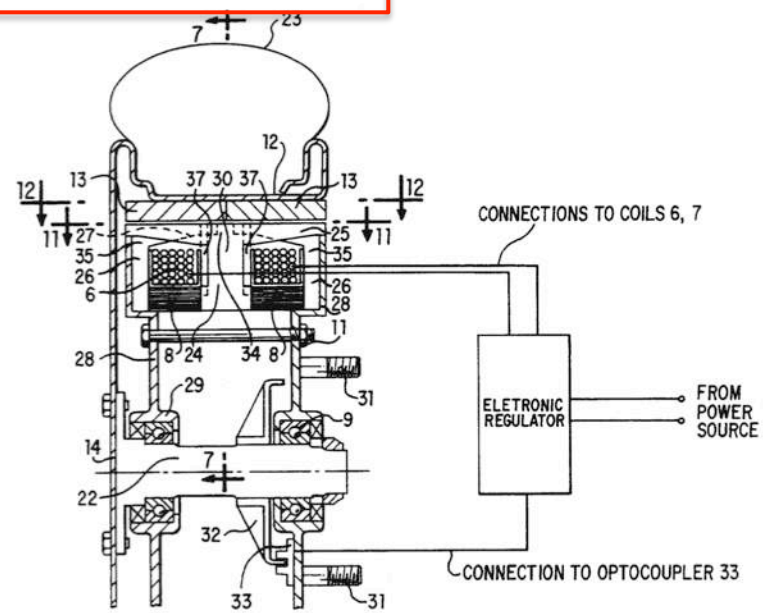

Spillover from US 5369324

US005690185A

United States Patent [19]
Sengel

[11] **Patent Number: 5,690,185**
[45] **Date of Patent: Nov. 25, 1997**

[54] **SELF POWERED VARIABLE DIRECTION WHEELED TASK CHAIR**

[75] Inventor: **Michael P. Sengel**, 110 S. Lorraine Rd., Wheaton, Ill. 60187-5833

[73] Assignee: **Michael P. Sengel**, Wheaton, Ill.

[21] Appl. No.: **410,685**

[22] Filed: **Mar. 27, 1995**

[51] **Int. Cl.**[6] **B60K 1/02**

[52] **U.S. Cl.** **180/65.1**; 180/65.5; 180/907; 280/304.1

[58] **Field of Search** 180/65.1, 65.5, 180/65.6, 65.8, 907, 214, 15, 21, 24.01, 24.07, 224, 255; 280/647, 648, 650, 250, 250.1, 304.1

[56] **References Cited**

U.S. PATENT DOCUMENTS

1,839,981	1/1932	Markey	180/255
2,362,616	11/1944	Cloud	180/65.1
3,111,181	11/1963	Yatich	180/65.1
3,534,825	10/1970	Reffle	180/252
4,461,367	7/1984	Eichinger et al.	180/65.1
4,613,151	9/1986	Kielczewski	280/650
5,090,513	2/1992	Bussinger	180/907
5,183,133	2/1993	Roy	180/252
5,249,636	10/1993	Kruse	180/21
5,275,248	1/1994	Finch	180/65.6
5,322,140	6/1994	Bussinger	180/65.1
5,366,036	11/1994	Perry	180/65.1
5,369,324	11/1994	Saether	310/49 R
5,409,256	4/1995	Csotonyi	180/907
5,482,125	1/1996	Pagett	180/65.5

FOREIGN PATENT DOCUMENTS

0 338 689	10/1989	European Pat. Off.	180/907
43 03 342	8/1994	Germany	180/65.6
330480	6/1930	United Kingdom .	

Primary Examiner—Brian L. Johnson
Assistant Examiner—Frank Vanaman

[57] **ABSTRACT**

A Self Powered Variable Direction Wheeled Task Chair, and a personal mobility device, providing additional ranges of motion in that it has an electrically powered height adjustable seat allowing the operator's seating position to range from standard table height seating to work bench or counter top seating. Additionally and more importantly, the chair, will have directional movement capabilities well beyond typical wheel chairs, or other wheel driven personal mobility devices in that it will utilize electro-mechanical directionally pivoting propulsion, capable of not only forward, backward, and pivot turning capabilities, but also sideways movement or more precisely, movement in any direction, and a rotational movement as may be required by the operator.

6 Claims, 16 Drawing Sheets

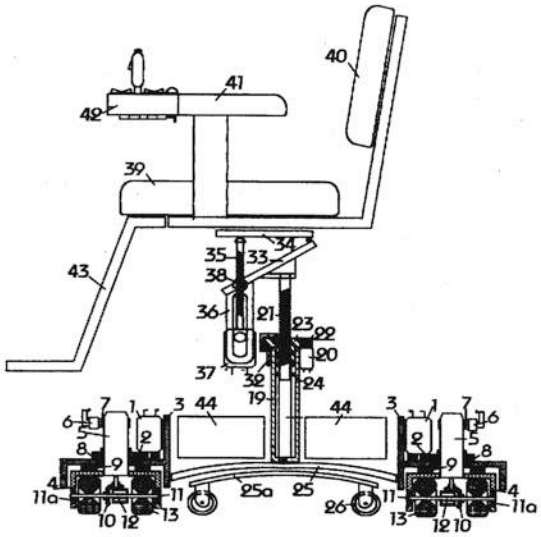

Clean patents receive more citations

50% higher

Table 2: Mean number of citations

	Clean	Dirty	Diff.
Citations received	3.399	2.295	1.104***
	(8.256)	(5.921)	[0.016]
Citations received within 5-years	1.807	1.066	0.741***
	(4.754)	(3.109)	[0.009]

Dirty are typically older so had more chances to be cited

75% higher

Potential issues

- Dramatic increase in patent application & citations
  - ➢ Legal reasons, search technology…
- A larger share of clean patents emerged in later years
- Clean and dirty patents distributed differently across patent offices
- Patents are always **more** likely to be cited within their class/category
  - Within class citation pool larger for dirty
  - If citing is costly (e.g. search costs) then dirty would have immediately lower citation probability

Regression approach

$$Cites_i = \exp\left(\beta Clean_i + \gamma X_i + \epsilon_i\right)$$

Number of citations received by innovation *i*

Poisson model because of left censoring

Can interpret as percentage difference

Clean Dummy

Controls

Basic Control Variables

- Patent office **x** year **x** technology fixed effects
- Past patent stock in the same technological class (4 digit IPC)

Accounting for size of "citation pool"

- Family size
- Triadic
- Granted

Controls for private value of innovation

Not all citations are created equal

- Economic value of different cites might vary greatly
  - Big drawback of citation approach

Our solution:

- Weight citing patents on the basis of how many times they are themselves cited

"Patent Rank"

Number of patents j cites (Backward cites)

$$r(i) = \frac{\alpha}{N} + (1-\alpha) \sum_{j \epsilon F(i)} \frac{r(j)}{B(j)}$$

Set of patents citing I (Forward cites)

Defines a system of linear equations.
Solve recursively

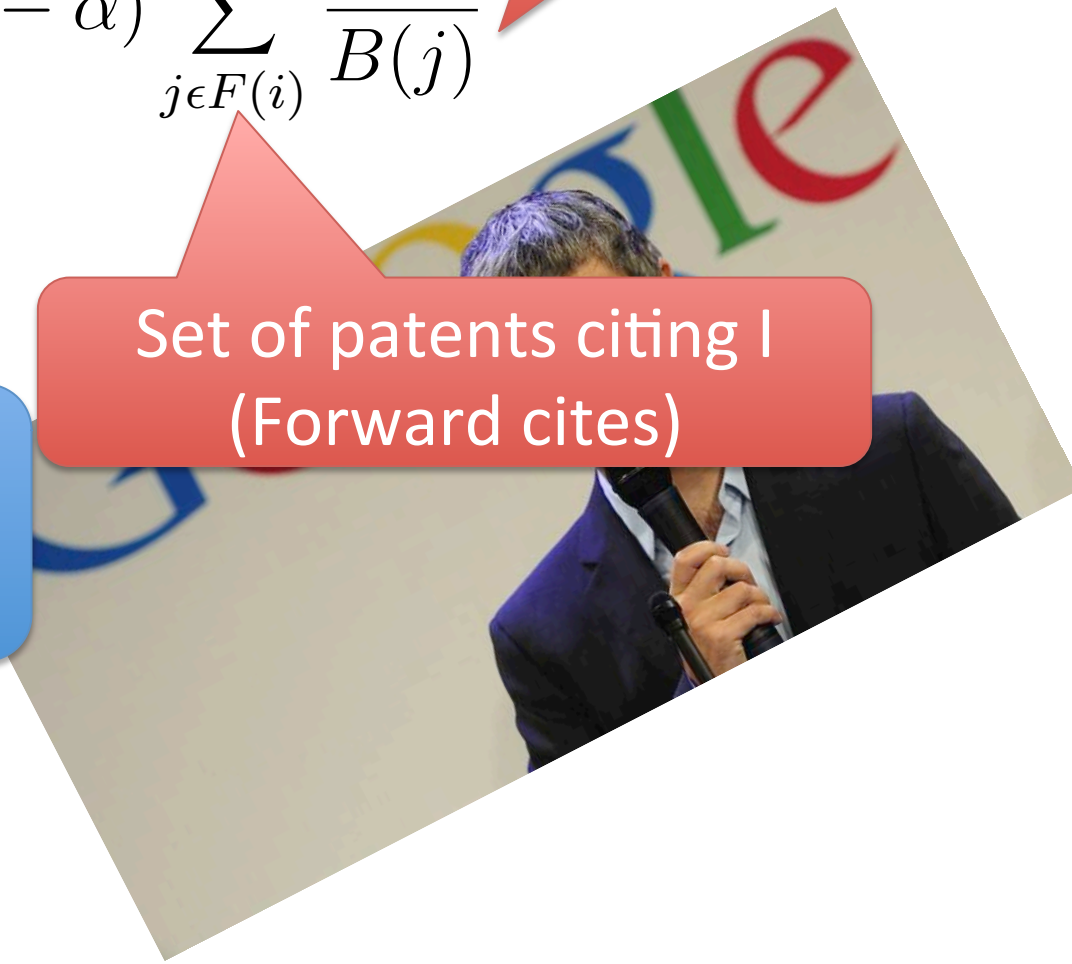

Citations & citations of citations…

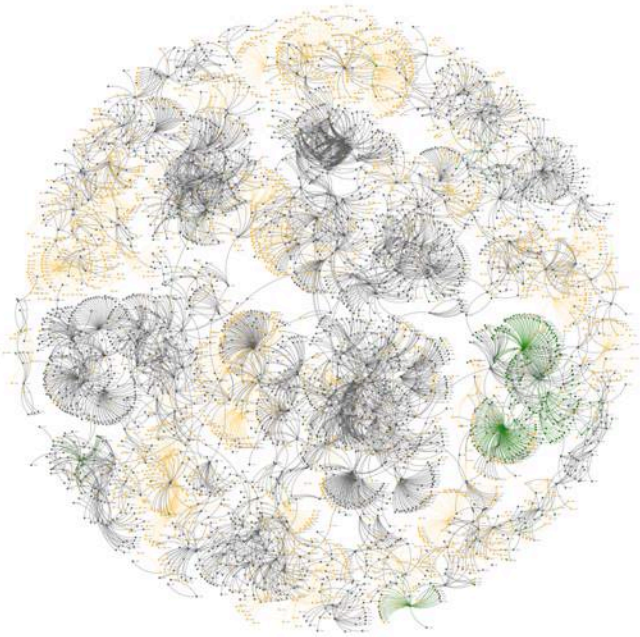

Citations vs Patent Rank

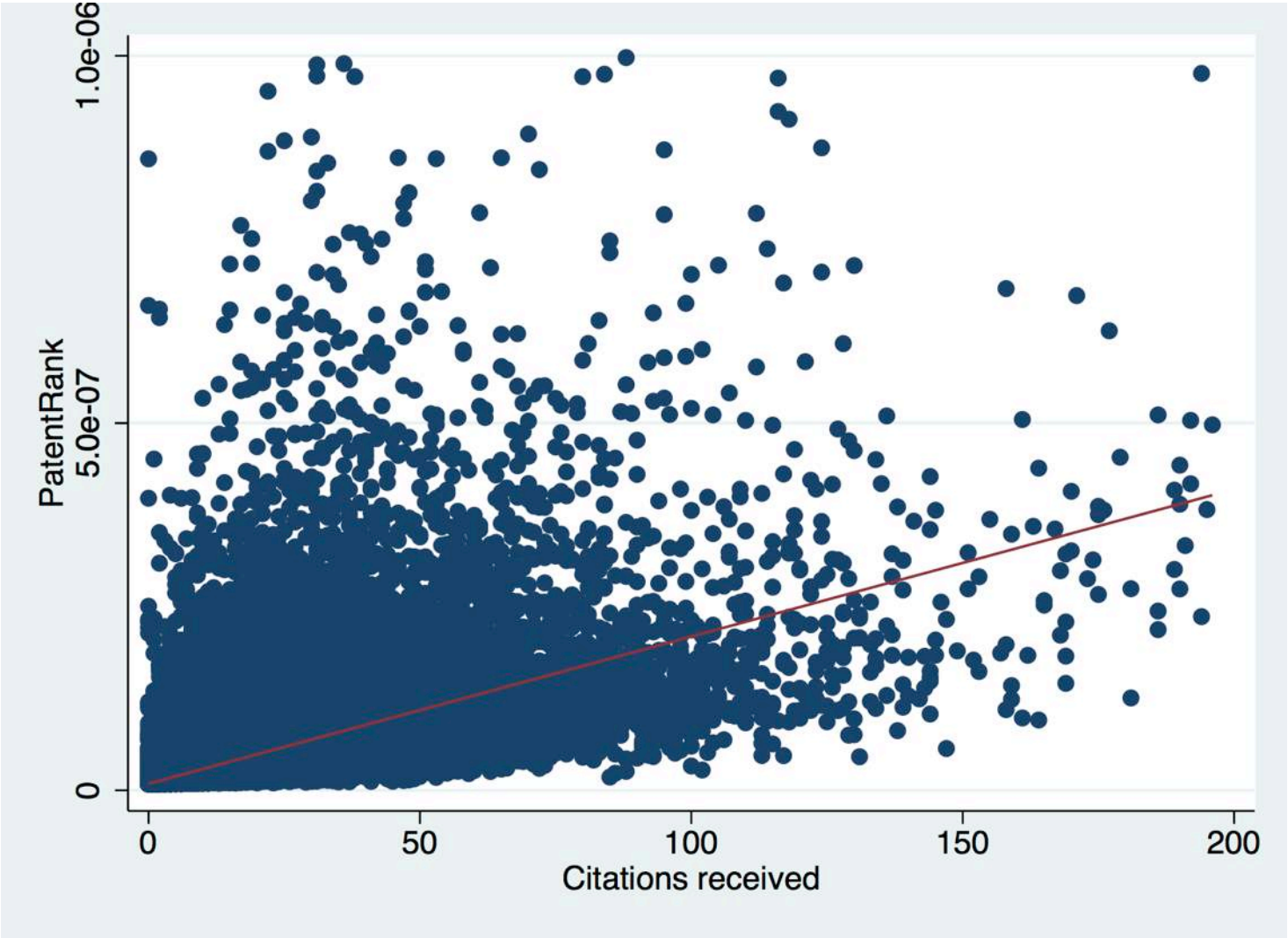

Basic regression results

	(1)	(2)	(3)	(4)	(5)	(6)
Dep. var.	Citations received			PatentRank		
Clean invention	0.398***	0.392***	0.430***	0.267***	0.264***	0.292***
	(0.015)	(0.015)	(0.014)	(0.013)	(0.014)	(0.014)
Number of patents		-0.092***	-0.057***		-0.052***	-0.031***
		(0.008)	(0.007)		(0.006)	(0.005)
Family size			0.073***			0.067***
			(0.004)			(0.003)
Triadic			0.456***			0.241***
			(0.036)			(0.025)
Granted			0.947***			0.491***
			(0.031)			(0.021)
Patent office-by-year-by-sector	ye	yes	ye	yes	yes	yes
Month fixed effect	y	yes	ye	yes	yes	yes
Obs.	1,	1,143,970	1,143	143,970	1,143,970	1,143,970

Notes: Robust s ><0.01, * otal number of citations rece umns 1 t olumns 4 to 6). All columns maximu

Bigger citation pool = lower citations

Value controls have expected positive signs

Regressions results by sector

	(1)	(2)	(3)	(4)
Sector	Transport	Electricity	Transport	Electricity
Dep. var.	Citation count		PatentRank	
Clean invention	0.347***	0.488***	0.219***	0.333***
	(0.018)	(0.023)	(0.014)	(0.023)
Number of patents	-0.0[illegible]	-0.047***	-0.048***	-0.019**
	[illegible]8)	(0.009)	(0.006)	(0.007)
		0.067***	0.062***	0.060***
		(0.004)	(0.007)	(0.004)
		0.432***	0.279***	0.252***
	(0.056)	(0.050)	(0.045)	(0.041)
Granted	1.134***	0.725***	0.620***	0.381***
	(0.034)	(0.024)	(0.027)	(0.017)
Observations	419,959	748,918	419,959	748,918

Stronger effects in electricity

Clean, grey & dirty

	(1)	(2)	(3)	(4)
Sample	Clean vs. Grey and true Dirty	Clean vs. Grey	Grey vs. True Dirty	Clean vs. True Dirty
Dep. var.	Citations received			
Clean/Grey invention	0.430***	0.191***	0.307***	0.502***
	(0.014)	(0.016)	(0.016)	(0.015)
Number of patents	-0.057***	-0.051***	-0.114***	-0.060***
	(0.007)	[illegible]	(0.005)	(0.007)
Family size	[illegible]	[illegible]	[illegible]***	0.071***
	[illegible]	[illegible]	[illegible]04)	(0.004)
Triadic	0.456***	0.481***	0.454***	0.441***
	(0.036)	(0.055)	(0.037)	(0.035)
Granted	0.947***	0.997***	0.977***	0.868***
	(0.031)	(0.035)	(0.033)	(0.027)
Observations	1,149,988	323,427	971,773	1,000,289

Clean > Grey > Dirty

National & international spillovers

	(1)	(2)	(3)
Dep. var.	Citations received	Citations received within country	Citations received across country
Clean invention	0.427***	0.419***	0.245***
	(0.000)	(0.000)	(0.000)
Number of patents	-0.057***	-0.058***	-0.082***
	(0.000)	(0.000)	(0.000)
Family size	0.071***	0.062***	0.064***
	(0.000)	(0.000)	(0.000)
Triadic	0.457***	0.363***	0.213***
	(0.000)	(0.000)	(0.000)
Granted	0.952***	0.763***	0.833***

Good news from unilateral & multilateral policy perspective

Cross-sectoral spillovers

	(1)	(2)	(3)
Dep. var.	Citations received	Intra-sectoral citations	Inter-sectoral citations
Clean invention	0.427***	0.454***	0.246***
	(0.000)	(0.000)	(0.000)
Number of patents	-0.059***	-0.053***	-0.082***
	(0.000)	(0.000)	(0.000)
Family size	0.072***	0.073***	0.065***
	(0.000)	(0.000)	(0.000)
Triadic	0.458***	0.485***	0.211***
	(0.000)	(0.000)	(0.000)
Granted	0.045***		0.830***

Good news from growth perspective

Robustness

Maybe it's a network effect?

Sample of innovations by inventors doing both dirty & clean

	(1)	(2)
Dep. var.	Citations received	
Clean invention	0.274***	0.336***
	(0.007)	(0.011)
Number of patents	-0.096***	-0.081***
	(0.004)	(0.006)
Family size	0.038***	0.094***
	(0.002)	(0.006)
Triadic	0.866***	0.644***
	(0.012)	(0.026)
Granted	1.234***	1.008***
	(0.007)	(0.011)
Inventor fixed effect	no	yes
Obs.	697,192	697,192

Maybe it's the companies?

Sample of innovations by companies doing both dirty & clean

	(1)	(2)
Dep. var.	Citations received	
Clean invention	0.400***	0.380***
	(0.000)	(0.000)
Number of patents	-0.038***	-0.067***
	(0.000)	(0.000)
Family size	0.091***	0.102***
	(0.000)	(0.000)
Triadic	0.462***	0.446***
	(0.000)	(0.000)
Granted	1.023***	1.000***
	(0.000)	(0.000)
Fixed effect	no	yes
Observations	435,584	435,584

Control for R&D subsidies

	(1)	(2)	(3)	(4)	(5)	(6)
Sample	All		Car		Electricity	
Dep. var.	PatentRank					
Clean invention	0.345***	0.353***	0.153**	0.149**	0.339**	0.347**
	(0.000)	(0.000)	(0.000)	(0.004)	(0.000)	(0.000)
Government spending		0.022***		-0.020		0.021**
		(0.001)		(0.187)		(0.001)
Number of patents	0.012	0.013	-0.040**	-0.040**	0.013	0.014
	(0.139)	(0.116)	(0.005)	(0.006)	(0.106)	(0.087)
Family size	0.060***	0.060***	0.057***	0.057***	0.059***	0.059***
	(0.000)	(0.000)	(0.000)	(0.000)	(0.000)	(0.000)
Triadic	0.285***	0.284***	0.391***	0.394***	0.274***	0.273***
	(0.000)	(0.000)	(0.000)	(0.000)	(0.000)	(0.000)
Granted	0.360***	0.360***	0.534***	0.534***	0.359***	0.358***
	(0.000)	(0.000)	(0.000)	(0.000)	(0.000)	(0.000)
Obs.	497,439	497,439	16,719	16,719	489,531	489,531

Universities are subsidy channel

	(1)	(2)
Dep. var.	Citations received	
Clean invention	0.421***	0.423***
	(0.014)	(0.015)
Number of patents	-0.047***	-0.050***
	(0.006)	(0.006)
Family size	0.070***	0.067***
	(0.003)	(0.003)
Triadic	0.450***	0.432***
	(0.034)	(0.034)
Granted	1.005***	0.992***
	(0.031)	(0.032)
University		0.429***
		(0.022)
Firms		0.271***
		(0.018)
Obs.	852,915	852,915

Reference category: Innovations filed by individuals

Universities / firms / individuals

	(1)	(2)	(3)
Applicant	University	Firm	Individual
Dep. var.	Citations received		
Clean invention	0.396***	0.418***	0.459***
	(0.003)	(0.016)	(0.030)
Number of patents	-0.100***	-0.041***	-0.068***
	(0.014)	(0.007)	(0.011)
Family size	0.072***	0.067***	0.377***
	(0.005)	(0.003)	(0.042)
Triadic	0.152***	0.454***	-0.870
	(0.043)	(0.035)	(0.613)
Granted	0.775***	1.022***	0.131***
	(0.047)	(0.032)	(0.036)
Obs.	36,165	706,575	75,719

Clean advantage slightly smaller for university patents

Further robustness

- Five-year window
- Citations made by *applicants* only (not by *examiners*)
- Extreme outcomes
- Different samples: inventions receiving at least one citation, Triadic patents, US or EPO patent office
- Correct for self-citations within same applicant
- Adding controls (# IPC codes, # inventors, # claims, # citations made, etc)

So is there any deeper reasons?

We look at 2 possibilities:

1. Generality and Originality

2. Novelty

Generality & Originality

$$Generality_i = 1 - \sum_{j \in Classes} s_{Gij}^2$$

Inverse concentration index

Share of citations **OF** innovation i in patent class j

$$Originality_i = 1 - \sum_{j \in Classes} s_{Oij}^2$$

Share of citations **BY** innovation i in patent class j

Clean more general, not more original

	(1)	(2)	(3)	(4)	(5)	(6)
Sector	All	Car	Electricity	All	Car	Electricity
Dep. var.	Generality measure			Originality measure		
Clean invention	0.008*	0.047***	-0.033***	-0.004	0.049***	-0.054***
	(0.011)	(0.000)	(0.000)	(0.347)	(0.000)	(0.000)
Number of patents	-0.047***	-0.081***	-0.024***	-0.051***	-0.086***	-0.027***
	(0.000)	(0.000)	(0.000)	(0.000)	(0.000)	(0.000)
Family size	0.012***	0.011***	0.012***	0.008***	0.007***	0.007***
	(0.000)	(0.000)	(0.000)	(0.000)	(0.000)	(0.000)
Triadic	0.035***	0.028***	0.046***	0.026***	0.017***	0.037***
	(0.000)	(0.000)	(0.000)	(0.000)	(0.000)	(0.000)
Granted	0.047***	0.053***	0.039***	0.024***	0.024***	0.022***
	(0.000)	(0.000)	(0.000)	(0.000)	(0.000)	(0.000)
Observations	515,217	227,678	291,989	382,236	162,919	222,538

Notes: Robust standard errors, p-values in parentheses (* p<0.05, ** p<0.01, *** p<0.001). The dependent variable is a generality measure based on Herfindahl index of concentration. The sample includes patents which have cited clean or dirty technologies in the car, electricity, fuel and light sectors (column 1), in the car sectors only (colunn 2), in the electricity sector only (column 3), in the fuel sector only (column 4) and in the light sector only (column 5). All columns are estimated by OLS and include patent office-by-year-by-sector fixed effects, and month fixed effects.

Controlling for generality & originality

	(1)	(2)	(3)	(4)
Dep. var.		Citations received		
Clean invention	0.365***	0.332***	0.363***	0.332***
	(0.012)	(0.012)	(0.012)	(0.012)
Number of patents	-0.044***	0.007	-0.025***	0.006
	(0.005)	(0.006)	(0.005)	(0.005)
Family size	0.043***	0.039***	0.041***	0.039***
	(0.002)	(0.002)	(0.002)	(0.002)
Triadic	0.296***	0.264***	0.287***	0.264***
	(0.014)	(0.013)	(0.014)	(0.013)
Granted	0.673***	0.591***	0.659***	0.592***
	(0.023)	(0.021)	(0.022)	(0.021)
Generality		1.149***		1.164***
		(0.019)		(0.019)
Originality			0.371***	-0.036*
			(0.015)	(0.015)
Obs.	281,978	281,978	281,978	281,978

Controlling for age of technology

	(1)	(2)	(3)	(4)
Dep. var.	Citations received			
Clean invention	0.410***	0.381***	0.363***	0.354***
	(0.013)	(0.013)	(0.013)	(0.013)
Number of patents	-0.094***	-0.052***	-0.043***	-0.046***
	(0.004)	(0.005)	(0.005)	(0.005)
Family size	0.070***	0.067***	0.068***	0.068***
	(0.004)	(0.003)	(0.003)	(0.003)
Triadic	0.448***	0.431***	0.406***	0.397***
	(0.035)	(0.035)	(0.034)	(0.034)
Granted	0.939***	0.929***	0.917***	0.912***
	(0.031)	(0.030)	(0.030)	(0.030)
Age of tech field		-0.177***	0.194***	
		(0.009)	(0.034)	
Age of tech field^2			-0.023***	
			(0.002)	
Age of tech dummies	no	no	no	yes
Observations	1,149,237	1,149,237	1,149,237	1,149,237

-20%

Cleanness or novelty? Clean vs CCS

	(1)	(2)
Dep. var.	Citations received	PatentRank index
Clean invention	-0.083*	0.045
	(0.034)	(0.023)
Number of patents	0.037***	0.057***
	(0.010)	(0.010)
Family size	0.065***	0.055***
	(0.006)	(0.005)
Triadic	0.477***	0.271***
	(0.062)	(0.047)
Granted	0.681***	0.338***
	(0.030)	(0.019)
Observations	106,700	106,700

Clean & other emerging techs against average invention

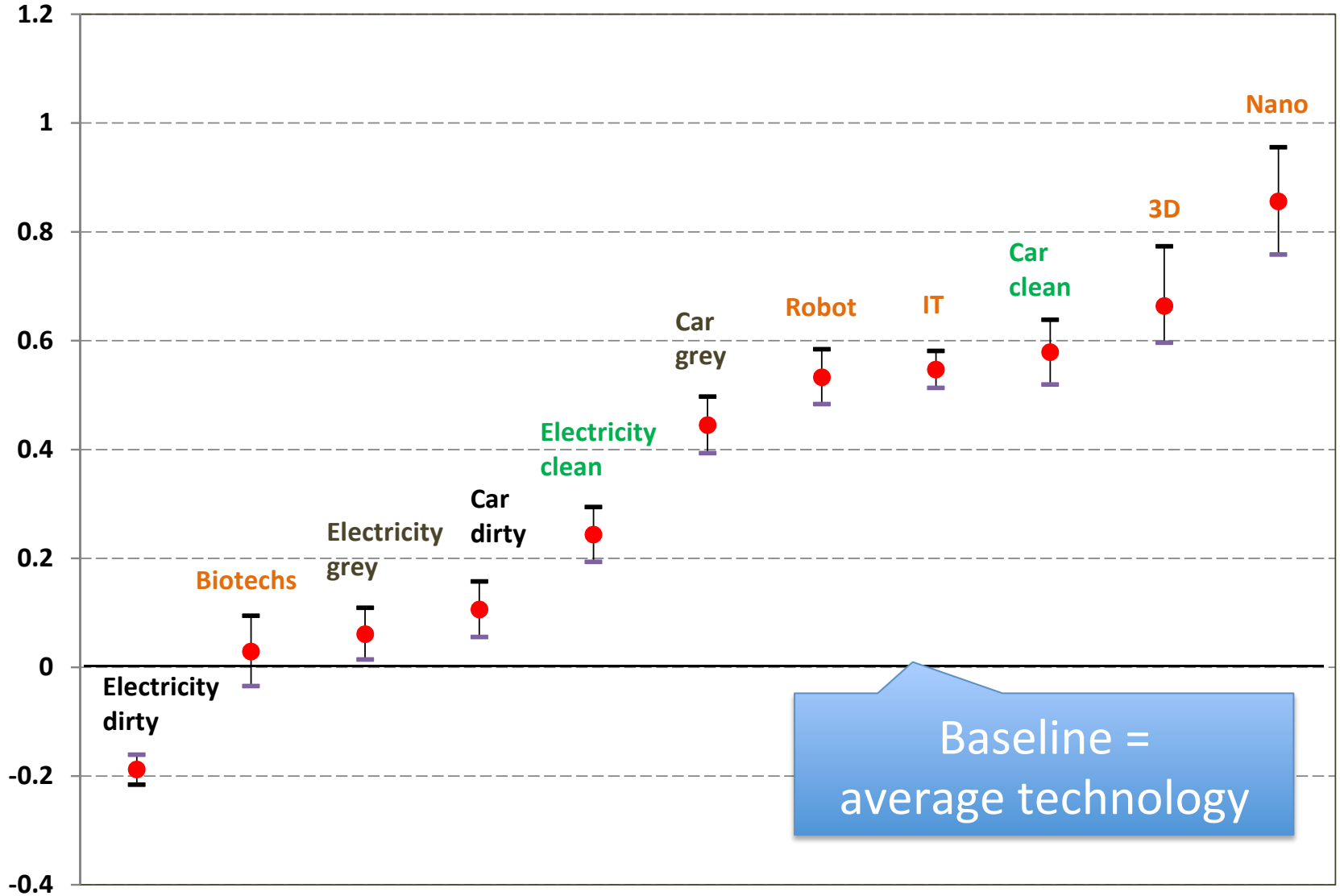

Conclusion

- Clean innovations generate significantly more spillovers as measured by patent citations
- Result extremely robust to a wide range of controls and variations in citations indices
- Key driver: novelty of clean – clean similar to IT sector
- Implications:
  - Justify specific support for clean R&D beyond carbon prices
  - Necessary condition for short term growth effects from clean policy
    - Make sure increased support for clean is at the expense of dirty and not other emerging fields

Road ahead

- Drawback of citations: cannot determine economic value of spillovers
  - What is the optimal amount of subsidies to clean R&D?
  - Can we quantify the effect of clean policies on economic growth?

➢ Clean vs Dirty Spillover study with firm level productivity/value data

Back-up

Spillovers from spillovers...

(12) INTERNATIONAL APPLICATION PUBLISHED UNDER THE PATENT COOPERATION TREATY (PCT)

(19) World Intellectual Property Organization
International Bureau

(43) International Publication Date
2 March 2006 (02.03.2006)

PCT

(10) International Publication Number
WO 2006/023539 A3

(51) International Patent Classification:
A61G 5/10 (2006.01)

(21) International Application Number:
PCT/US2005/029229

(22) International Filing Date: 16 August 2005 (16.08.2005)

(25) Filing Language: English

(26) Publication Language: English

(30) Priority Data:

60/601,924	16 August 2004 (16.08.2004)	US
60/611,407	20 September 2004 (20.09.2004)	US

(71) Applicants and
(72) Inventors: **KRAMER, Kenneth, L.** [US/US]; 712 N. County Road 850 E., Greensburg, IN 47240 (US). **DAHNEKE, Marshall, S.** [US/US]; 69 Morton Way, Batesville, IN 47006 (US). **WILCOX, Reed, N.** [US/US]; Ten Keeler Court, Ridgefield, CT 06877 (US). **GAAG, Franz** [DE/CH]; Route de Collex, 22, CH-1294 Genthod (CH). **SCHWANEMANN, David, T.** [US/US]; 1305 Hillcrest Road, Cincinnati, OH 45224 (US). **TEUFEL, Rainer, B.** [DE/US]; 490 Tucker Drive, Worthington, OH 43085 (US). **KOLOSKI, Peter, A.** [US/US]; 2719 Donna Drive, Upper Arlington, OH 43220 (US). **LOTHROP, Thornton, K.** [US/US]; 77 West South Street, Worthington, OH 43085 (US). **BERGER, Ryan, R.** [US/US]; 1587 Grandview Avenue, No.B., Columbus, OH 43212 (US).

(74) Agent: **CONRAD, Richard, D.**; Barnes & Thornburg LLP, 11 South Meridian Street, Indianapolis, IN 46204 (US).

(81) Designated States *(unless otherwise indicated, for every kind of national protection available)*: AE, AG, AL, AM,

[Continued on next page]

(54) Title: HOME CARE EQUIPMENT SYSTEM

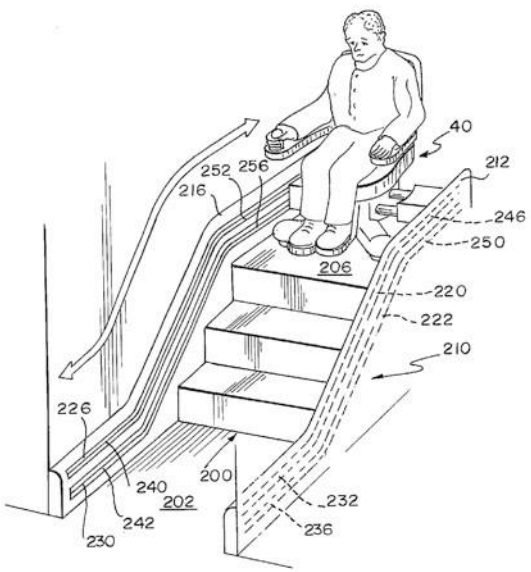

(57) Abstract: A system for assisting a person of limited mobility in moving from room to room within a home and performing essential daily activities includes a personal mobility device (40, 100, 1700, 1800, 2000) which includes transfer drivers (164) which engage a transfer system (210) to transition from a first elevation to a second elevation.

WO 2006/023539 A3

This is true across sectors

Table 3: Mean number of citations by sectors

	Clean	Dirty	Diff.
		Car	
Citations received	4.275	3.215	1.060***
	(9.626)	(7.185)	[0.031]
Citations received within 5-years	2.572	1.651	0.920***
	(5.903)	(4.174)	[0.018]
		Electricity production	
Citations received	2.800	1.839	0.961***
	(7.092)	(5.091)	[0.018]
Citations received within 5-years	1.281	0.767	0.514***
	(3.681)	(2.312)	[0.009]

Notes: The first two columns report the mean values and standard deviation in parentheses. The last column is reports a t-test for the difference in means with the standard error in parentheses. ** and *** indicate significance at 1% and 0.1% level respectively.

Clean & dirty patents

- Usage of patent classification system (IPC & ECLA)
- OECD & EPO have been working on identifying clean patents
- Most recently Y02: A new classification system for climate change related technologies
  - Input from examiners and experts
  - Backward re-classification of patents

Number of innovations

Table 1: Number of clean and dirty inventions by sector

Sector	Clean	Grey	"Truly" Dirty	Total
Car	74,877	133,083	212,193	420,153
Electricity	103,659	19,827	627,590	751,076
Total	178,536	152,910	839,783	1,[illegible]1,229

Electricity dominates the sample

Classification groups for car

Clean		Grey		Dirty	
B60K 1	Arrangement or mounting of electrical propulsion units	F02M 39/71	Fuel injection apparatus	F02B	Internal-combustion piston engines;
B60K 6	Arrangement or mounting of hybrid propulsion systems	F02M 3/02-05	Idling devices for carburettors l		combustion engines in genera
	comprising electric motors and internal combustion		preventing flow of idling fue	F02D	Controlling combustion engines
B60L 3	Electric devices on electrically-propelled vehicles for	F02M 23	Apparatus for adding secondary	F02F	Cylinders, pistons, or casings for
	safety purposes: Monitoring operating variables,		air to fuel-air mixture		combustion engines; arragement
	e.g. speed, deceleration, power consumption	F02M 25	Engine-pertinent apparatus for		of sealings in combustion engines
B60L 7	Dynamic electric regenerative braking		adding non-fuel substances	F02M	Supplying combustion engines
B60L 11	Electric propulsion with power supplied within the vehicle		or small quantities of secondary		with combustiles mixtures
B60L 15	Methods, circuits, or devices for controlling the		fuel to combustion-air, main fuel,		or constituents thereof
	traction-motor speed of electrically-propelled vehicles		or fuel-air mixture	F02N	Starting of combustion engines
B60R 16	Electric or fluid circuits specially adapted for vehicles	F02D 41	Electric control of supply of combustion	F02P	Ignition (other than compression
	and not otherwise provided for		mixture or its constituents		ignition) for internal-combustion engines
B60S 5	Supplying batteries to, or removing batteries form	F02B 47/06	Methods of operating engines involving		
B60W 10	Conjoint control of vehicles sub-units of different		adding non-fuel substances or anti-knock		
	type or different function		agents to combustion		
B60W 20	Control systems specially adapted for hybrid vehicles		air, fule, or fuel-air mixtures of engines,		
H01M	Fuel cells		the substances including non-airborne oxygen		

Classification groups for electricity

Clean		Grey		Dirty	
Y02E10	Energy generation through renewable energy sources	Y02E50	Technologies for the production of fuel of non-fossil origin	C10G1	Production of liquid hydrocarbon mixtures from oil-sha oil-sand, or non-melting solid carbonaceous or similar materials, e.g. wood, coal, oil-sand, or the like B03B
Y02E30	Energy generation of nuclear origin	Y02E20/10	Combined combustion	C10L1	Fuel
E02B9/08	Tide or wave power plants	Y02E20/12	Heat utilisation in combustion or incineration of waste	C10J	Production of fuel gases by carburetting air or other ga
F03B13/10-26	Submerged units incorporating electric generators or motors characterized by using wave or tide energy	Y02E20/14	Combined heat and power generation	E02B	Hydraulic engineering
F03D	Wind motors	Y02E20/16	Combined cycle power plant, or combined cycle gas turbine	F01K	Steam engine plans; steam accumulators; engine plants not otherwise provided for; engines using special working fluids or cycles
F03G4	Devices for producing mechanical power from geothermal energy	Y02E20/18	Integrated gasification combined cycle	F02C	Gas-turbine plants; air intakes for jet-propulsion plants; controlling fuel supply in air-breathing jet-propulsion plants
F03G6	Devices for producing mechanical power from solar energy	Y02E20/30	Technologies for a more efficient combustion or heat usage	F22	Steam generation
F03G7/05	Ocean thermal energy conversion	Y02E20/32	Direct C02 mitigation	F23	Combustion apparatus; combustion processes
F24J2	Use of solar heat, e.g. solar heat collectors	Y02E20/34	Indirect C02 mitigation, by acting on non C02 directly related matters of the process, more efficient use of fuels	F24J	Production or use of heat not otherwise provided for
F24J3/08	Production or use of heat, not derived from combustion using geothermal heat	Y02E20/36	Heat recovery other than air pre-heating	F27	Furnaces; kilns; ovens; retorts
F26B3/28	Drying solid materials or objects by processes involving the application of heat by radiation, e.g. from the sun			F28	Heat exchange in general

Keeping it in the family

- For a given innovation there are many patents filed in different patent offices
- Patent family: all patents related to the same innovation/invention
- Throughout we aggregate at the innovation level

Some ground-breaking spillovers

COMBINED SOLAR POWERED FAN AND HAT ARRANGEMENT FOR MAXIMIZING AIRFLOW THROUGH THE HAT

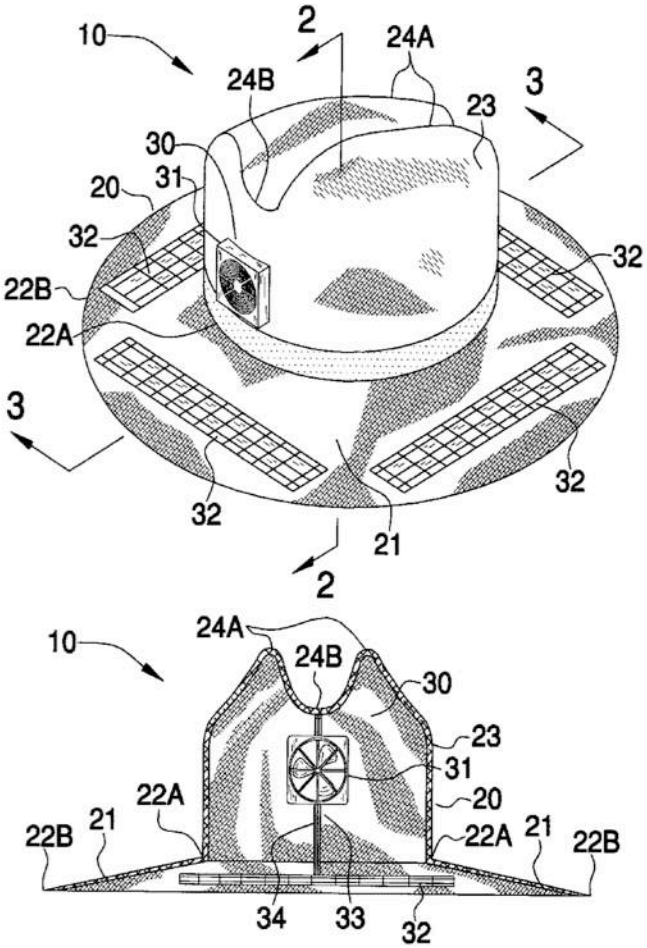

SOLAR POWERED, SILENT, ENERGY EFFICIENT BABY ROCKER

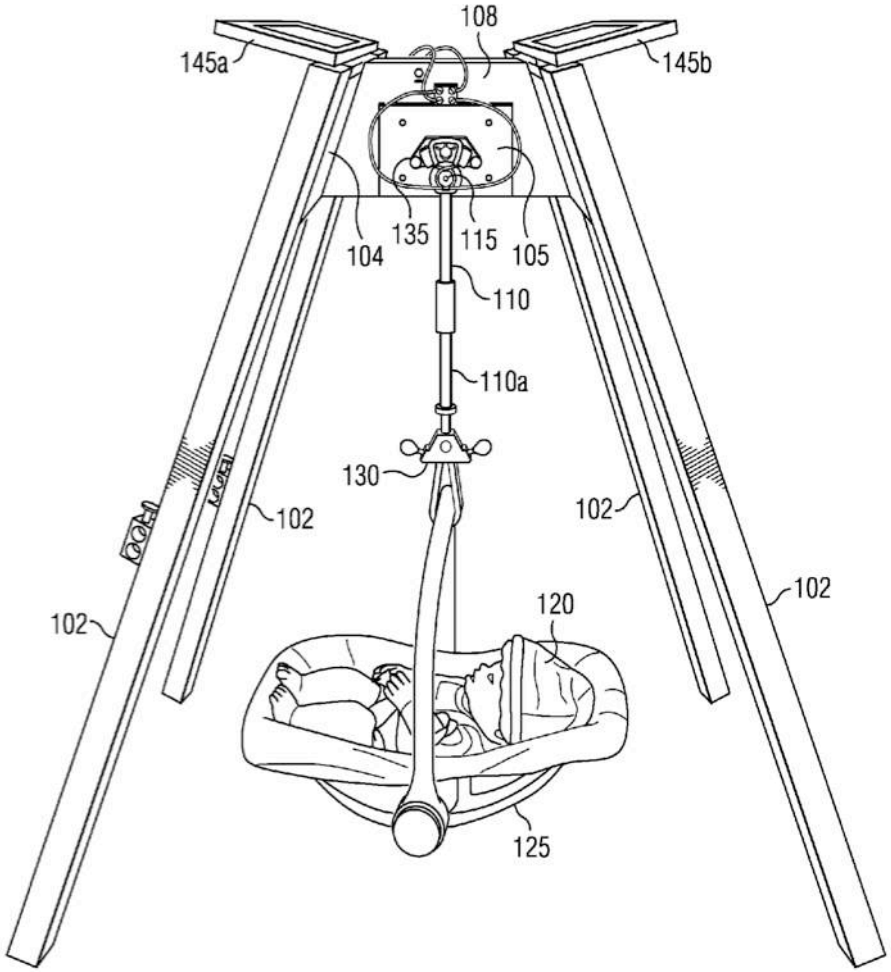

Patent citation distribution

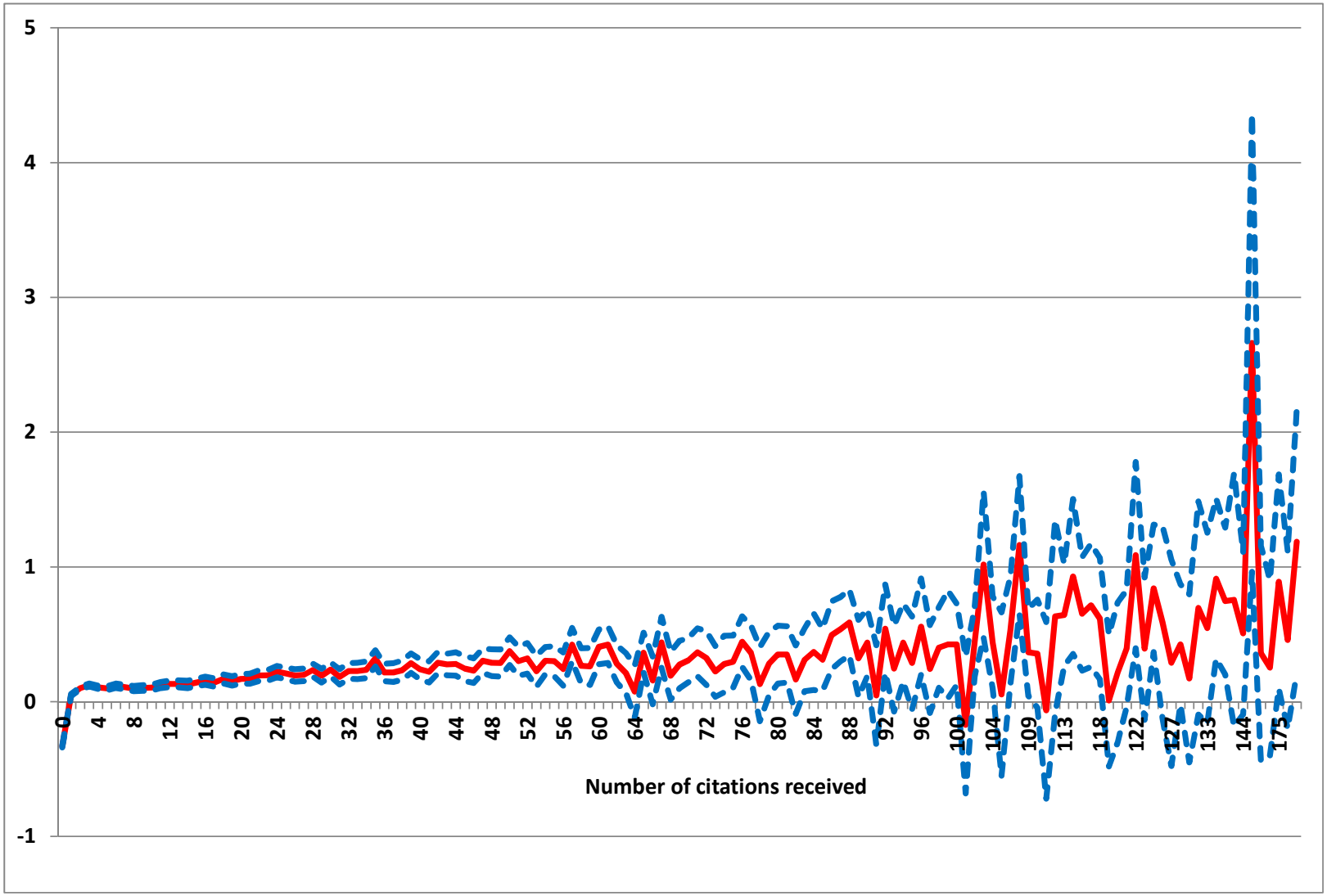

Clean driven by subsidies already?

- Climate change has been a priority for governments for a while
- Energy efficiency and security has been an issue for even longer
- Clean innovations might already have been driven by subsidies?

Regress on R&D subsidies

- IEA collects data on clean R&D subsidies by governments for 28 countries

- Allocate spending to innovations on the basis of location of inventors

$$GovernmentSpending_i = \sum_{j \in Inventors(i)} GovernmentSpending_{c(j)}$$